ANSI G7 STANDARD ROLLER CHAIN

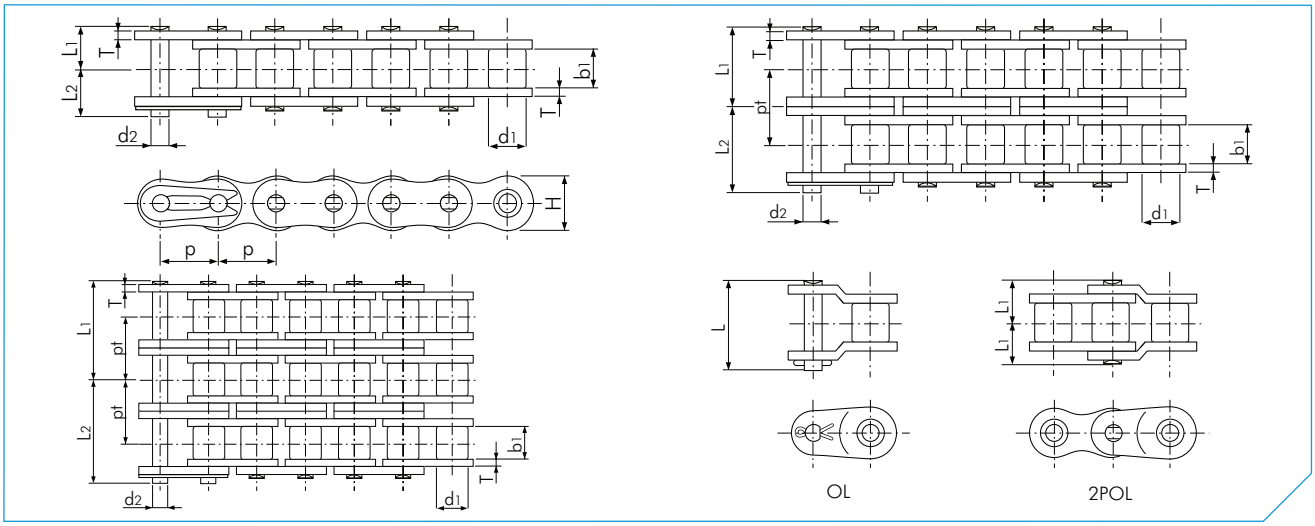

ANSI G7

Dimensions in mm

TSUBAKI Chain No.	Pitch p		Roller Diameter d1	Inner Width b1	Pin Diameter d2	Pin Length L1	Pin Length L2	Pin Length L	Link Plate Tickness T	Link Plate Height H (max)	Transverse Pitch pt	Min. Tensile Strength acc. to ANSI kN	Min. Tensile Strength acc. to Tsubaki kN	Approx. Mass kg/m
RS25-1	6.35	(1/4")	3.30	3.18	2.31	3.80	4.50	-	0.74	5.84	-	3.6	4.1	0.14
RS25-2						6.95	7.75	-			6.40	7.2	8.2	0.27
RS25-3						10.15	10.95	-			6.40	10.8	12.4	0.42
RS35-1	9.525	(3/8")	5.08	4.78	3.59	5.85	6.85	13.50	1.25	9.00	-	8.7	9.8	0.33
RS35-2						10.90	11.90	24.50			10.10	17.4	19.6	0.69
RS35-3						16.00	16.90	34.60			10.10	26.1	29.4	1.05
RS35-4						21.05	21.95	44.70			10.10	-	39.2	1.41
RS37-1	12.70	(1/2")	7.80	3.40	3.63	5.10	5.90	12.45	1.00	9.80	-	-	8.1	0.29
RS38-1	12.70	(1/2")	7.80	4.80	3.63	6.00	7.10	14.10	1.10	9.80	-	-	8.1	0.35
RS41-1	12.70	(1/2")	7.77	6.38	3.59	6.75	7.95	15.10	1.25	9.80	-	7.4	10.3	0.41
RS40-1	12.70	(1/2")	7.92	7.95	3.97	8.25	9.95	17.90	1.50	12.00	-	15.2	17.7	0.64
RS40-2						15.45	17.15	33.50			14.40	30.4	35.3	1.27
RS40-3						22.65	24.15	47.90			14.40	45.6	53.0	1.90
RS40-4						29.90	31.30	62.30			14.40	-	70.6	2.53
RS50-1	15.875	(5/8")	10.16	9.53	5.09	10.30	11.90	22.50	2.00	15.00	-	24.0	28.4	1.04
RS50-2						19.35	21.15	41.80			18.10	48.0	56.9	2.07
RS50-3						28.40	30.20	59.90			18.10	72.0	85.3	3.09
RS50-4						37.45	39.25	78.10			18.10	-	114.0	4.11
RS60-1	19.05	(3/4")	11.91	12.70	5.96	12.85	14.75	28.20	2.40	18.10	-	34.2	40.2	1.53
RS60-2						24.25	26.25	52.60			22.80	68.4	80.4	3.04
RS60-3						35.65	38.15	75.50			22.80	102.6	121.0	4.54
RS60-4						47.05	49.55	98.30			22.80	-	161.0	6.04
RS80-1	25.40	(1")	15.88	15.88	7.94	16.25	19.25	36.60	3.20	24.10	-	61.2	71.6	2.66
RS80-2						30.90	33.90	67.50			29.30	122.4	143.0	5.27
RS80-3						45.60	48.50	96.90			29.30	183.6	215.0	7.89
RS80-4						60.25	63.25	126.30			29.30	-	286.0	10.50
RS100-1	31.75	(1 1/4")	19.05	19.05	9.54	19.75	22.85	43.70	4.00	30.10	-	95.4	107.0	3.99
RS100-2						37.70	40.80	81.50			35.80	190.8	214.0	7.85
RS100-3						55.65	58.75	117.30			35.80	286.2	321.0	11.77
RS100-4						73.55	76.65	153.10			35.80	-	428.0	15.70
RS120-1	38.10	(1 1/2")	22.23	25.40	11.11	24.90	28.90	55.00	4.80	36.20	-	137.1	148.0	5.93
RS120-2						47.60	51.60	103.20			45.40	274.2	296.0	11.70
RS120-3						70.40	74.40	148.60			45.40	411.3	444.0	17.53
RS120-4						93.10	97.10	194.00			45.40	-	592.0	23.36
RS140-1	44.45	(1 3/4")	25.40	25.40	12.71	26.90	31.70	59.50	5.60	42.20	-	185.9	193.0	7.49
RS140-2						51.35	56.15	112.30			48.90	371.8	386.0	14.83
RS140-3						75.85	80.75	161.30			48.90	557.7	580.0	22.20
RS160-1	50.80	(2")	28.58	31.75	14.29	31.85	36.85	70.20	6.40	48.20	-	244.6	255.0	10.10
RS160-2						61.15	66.15	132.20			58.50	489.2	510.0	20.04
RS160-3						90.45	95.45	190.70			58.50	733.8	765.0	30.02
RS180-1	57.15	(2 1/4")	35.71	35.72	17.46	35.65	42.45	80.60	7.15	54.20	-	308.2	336.0	13.45
RS180-2						68.75	75.35	151.10			65.80	616.4	673.0	26.52
RS180-3						101.70	108.50	216.90			65.80	924.6	1010.0	38.22
RS200-1	63.50	(2 1/2")	39.68	38.10	19.85	39.00	44.80	87.30	8.00	60.30	-	381.7	427.0	16.49
RS200-2						74.85	80.65	161.20			71.60	763.4	853.0	32.63
RS200-3						110.75	116.45	233.00			71.60	1145.1	1280.0	49.02
RS240-1	76.20	(3")	47.63	47.63	23.81	47.90	55.50	106.70	9.50	72.40	-	550.4	623.0	24.50
RS240-2						91.90	99.40	198.40			87.80	1100.8	1250.0	48.10

Note:

1. RS25 - RS35 are rollerless chain (only bush). The figure shown is the bush diameter.
2. Connecting links are clip type for sizes up to RS60, and cotter type for sizes RS80 to RS200. RS240 connecting links are spring pin type.
3. When a single pitch offset link is used, please calculate a 35% reduction of the fatigue strength.